National Bronze MFG.
MICHIGAN

# Back to the Basics:

## Understanding the Bronze Casting Process

# Introduction

In 1911, National Bronze Mfg. started out as a bronze foundry, and over the years as a casting manufacturer we have become the experts in the various bronze casting methods. Each and every day, we receive multiple phone calls from customers with questions regarding the various bronze casting processes. This paper will help clear up some of the confusion, and assist you in choosing the most appropriate method for your application.

Let's begin by describing the 3 most common types of casting processes: Sand Casting, Centrifugal Casting, and Continuous Casting. Each method has its own unique benefits and limitations.

## Process #1: Sand Casting

Sand Casting is the oldest of the three prevalent bronze casting methods. This process starts by making a pattern in the shape of the desired part. The pattern is then placed in a box called a flask and packed with sand. A binding agent is added to the sand to help harden it. Once the mold is cured, the pattern is removed. The remaining hollow shaped area is where the molten bronze is poured in order to form into the desired shape. After the metal cools, the sand mold is removed, and you are left with the sand casting. This casting can either be sold as is, or can undergo additional finishing processes before reaching the customer.

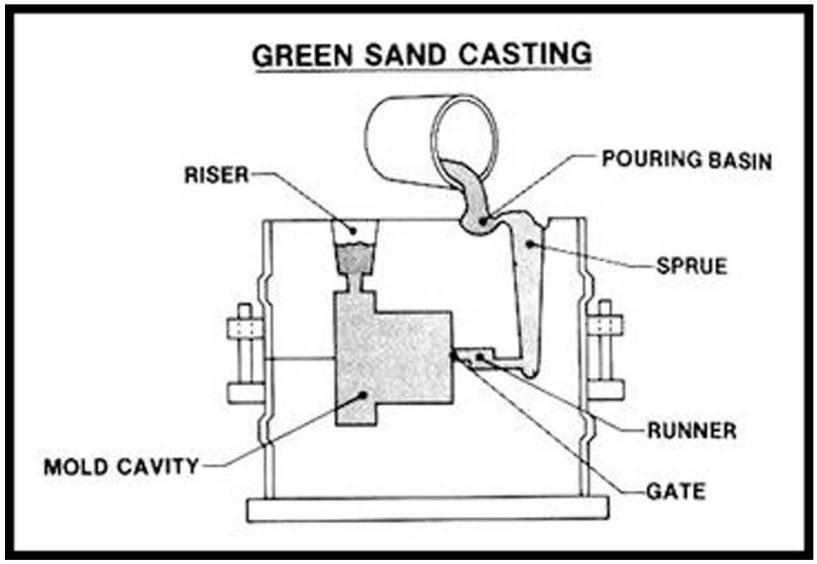


**Main Benefits:** The sand casting method has the ability to produce special shapes that are not obtainable through the use of other casting processes.

**Limitations:** Due to the multiple step process and extended solidifying time required by the sand casting process, the resultant bronze material may contain unwanted impurities. Furthermore, this method is not optimal for mass production, as it is a longer process.

# Process #2: Centrifugal Casting

The centrifugal casting process is typically used to cast cylindrical shaped castings. Centrifugal casting involves a cylindrical shaped mold. This mold is then rotated or spun on its axis at a predetermined speed. The casting's wall thickness is controlled by the amount of material added during the pouring stage. Due to the nature of the centrifugal casting process, the inner diameter of the part must always be round in shape. Since most impurities in the metal typically have a lower density than the metal itself, they will collect in the inner diameter during the casting process, allowing them to be machined away quickly and easily.

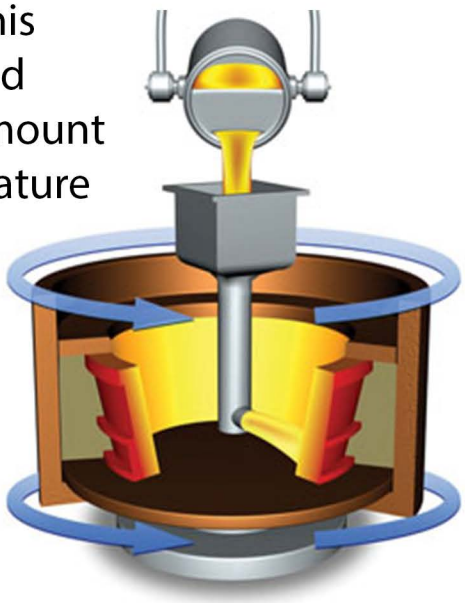

**Main Benefits:** Centrifugal casting yields bronze material that contains fewer impurities. In addition, there are lower costs associated with the ability to utilize similar molds for varying casting sizes.

**Limitations:** Centrifugal casting is limited in its ability to produce special shapes and certain lengths when compared to other casting methods.

# Process #3: Continuous Casting

This method is used to cast a continuous length of material. Molten bronze is cast through a mold from which it takes its profile. The length of the casting is not determined by the mold as it is with the other processes; instead, it is cut by a saw. Continuous casting utilizes the force of gravity to help move the metal through the mold. This casting operation begins high above ground and requires a lot of space. Continuous casting generally yields less material loss than the other forms, as well as a higher productivity rate.

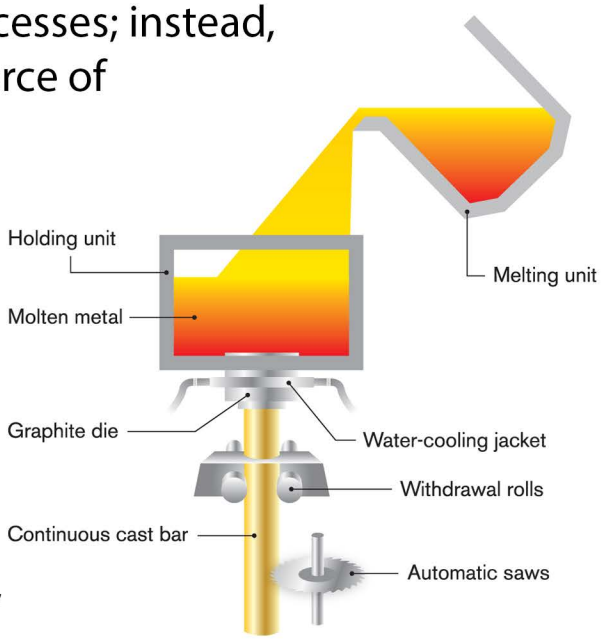


**Main Benefits:** This method typically provides a superior quality of casting due to the increased solidifying time, and more uniform material properties. In addition, there is less material waste, which promotes a lower cost of production.

**Limitations:** The continuous casting process requires a much larger lot size than other methods in order to achieve the cost savings.

# Where the Confusion Occurs

In our experience, 95% of the confusion experienced by our customers is caused by outdated prints. When National Bronze Mfg. was founded in 1911, sand casting was the only way to cast bronze parts. As a result, drawings from that time period will reference sand casting as the desired casting method. This may be obviously spelled out in the print, or may be signified by an ASTM or similar designation. Over time, many bronze casting methods have been developed and proven to be more effective for certain applications, such as centrifugal and continuous casting. Unfortunately, if a customer is working off a print prior to the development of these methods, they may have difficulty finding the correct material. The material may not be manufactured via the specified process anymore, in lieu of more advanced and efficient processes. Unless the customer understands what all of the specific designations mean, it is difficult to understand why they cannot locate certain materials.

# Ask the Experts

The best way to determine what casting method is best for your project is to consult one of our experienced sales engineers. They will look at the every factor relating to your project, and recommend casting methods specific for your individual needs. Contact us today to find out which casting method is right for your project.

National Bronze MFG. MICHIGAN

28070 Hayes Road
Roseville, MI 48066
sales@nationalbronze.com
586.791.2000